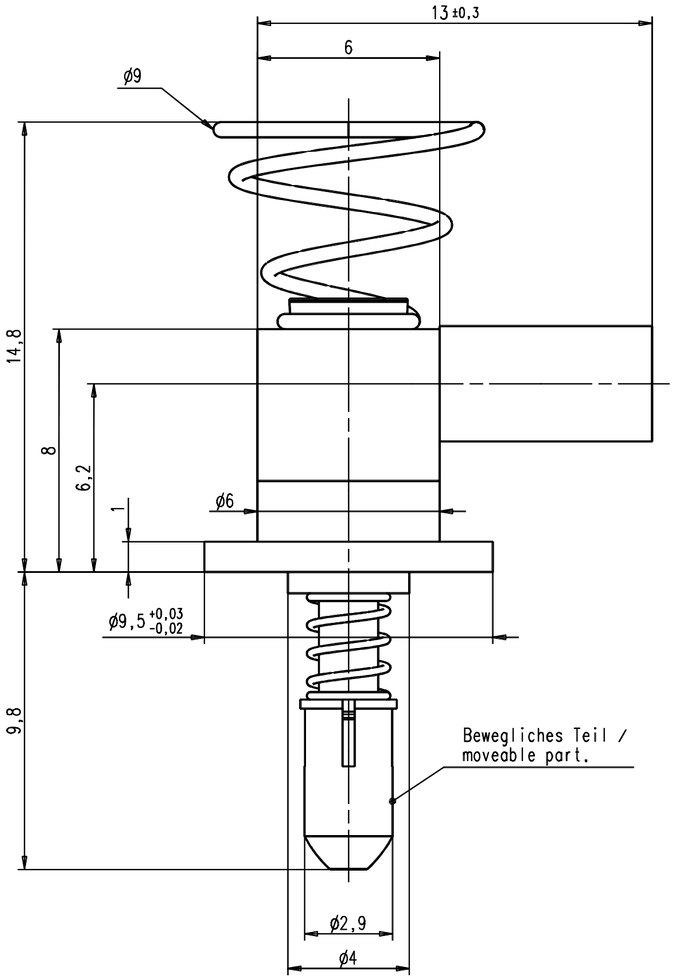

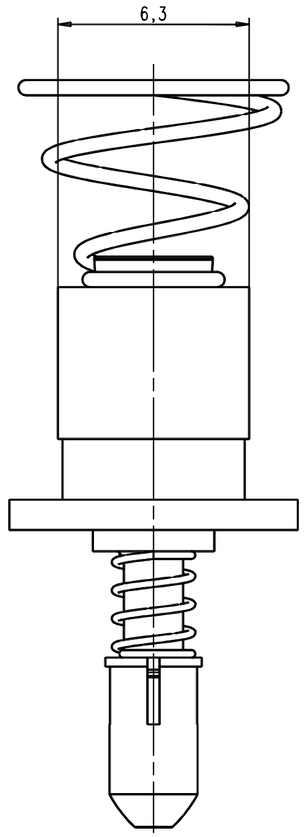

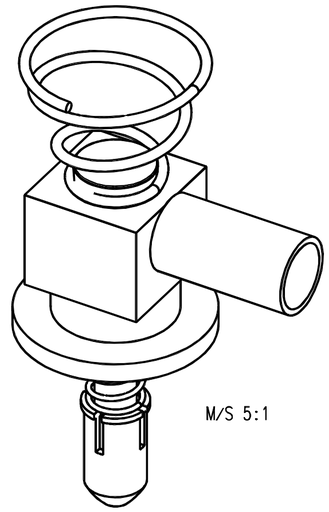

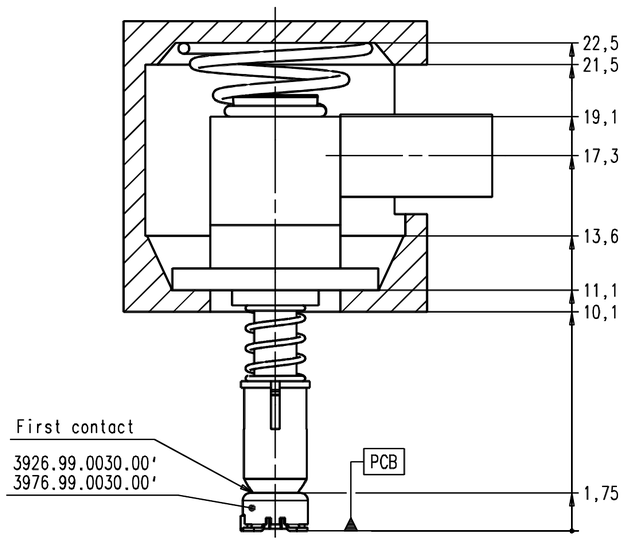

System preloaded
M/S 5:1

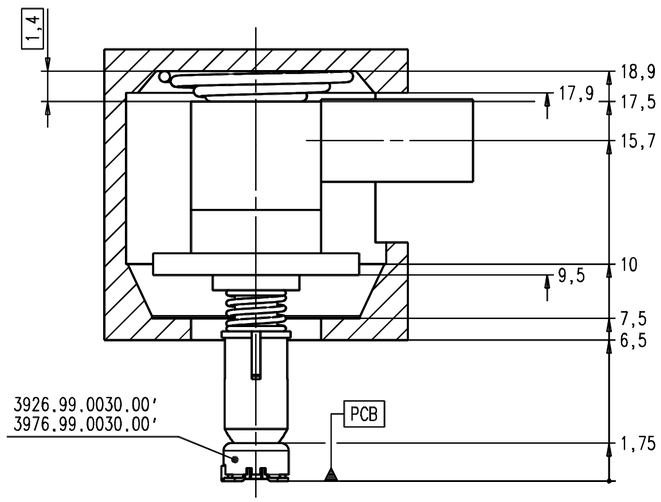

System loaded
M/S 5:1

Kabelzuschnitt
Stripping dimension

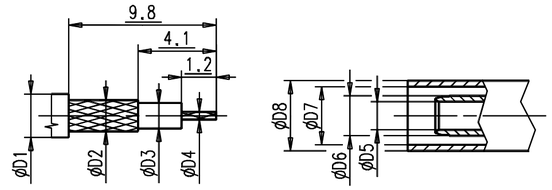

Fuer Kabel /
For cable

Gr.	Type Typ	ØD1 max.	ØD2 max.	ØD3 max.	ØD4 max.	ØD5	ØD6	ØD7	ØD8	Crimp ⬡ Aussen/out	Solder Innen/in
1											
2	ENVIROFLEX-316	2,52	2,05	1,54	0,54	1,70	2,30	3,00	4,00	3,25	solder
3											
4											
5	ENVIROFLEX-316-D	3,16	2,50	1,54	0,54	1,70	2,30	3,30	4,00	3,25	solder

IMS CONNECTOR SYSTEMS

general tolerance
ISO 2768
- mH -

ISO 2768
-m-
0,5-3: ±0,1
3-6: ±0,1
6-30: ±0,2

scale: 7:1

Assembly instruction:
Stripping dimension:

	date	name
generate	03.05.06	Zech
checked		
Norm		
47233		

Kabelwinkelstecker

Cable mount angle plug

4147.93.8914.1''

Rev.

nr.	rev.	alteration	date	name