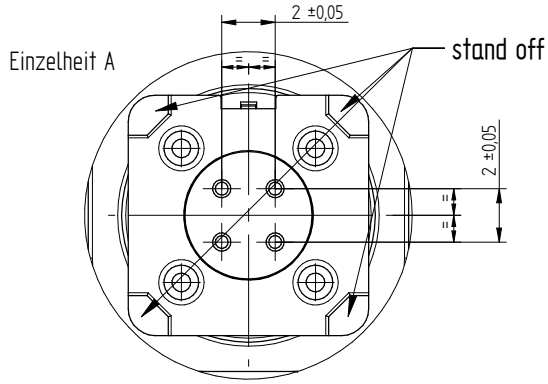

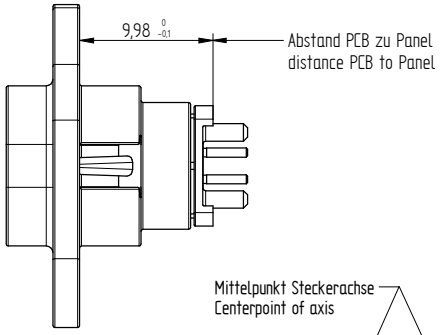

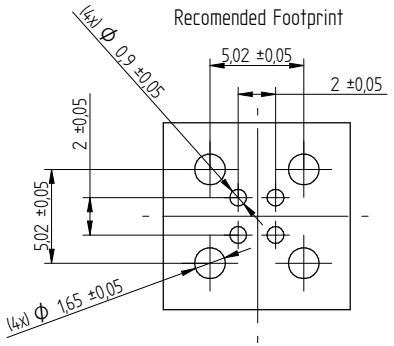

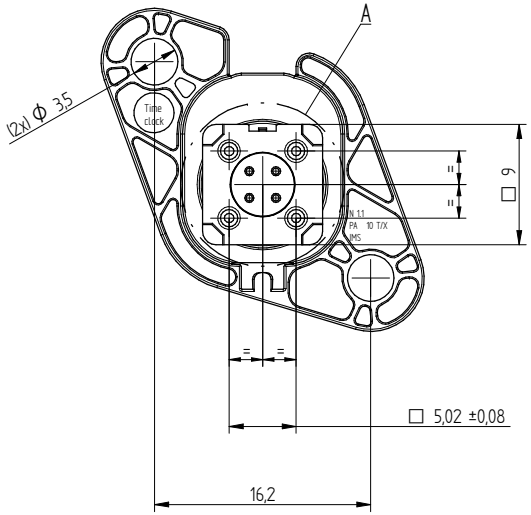

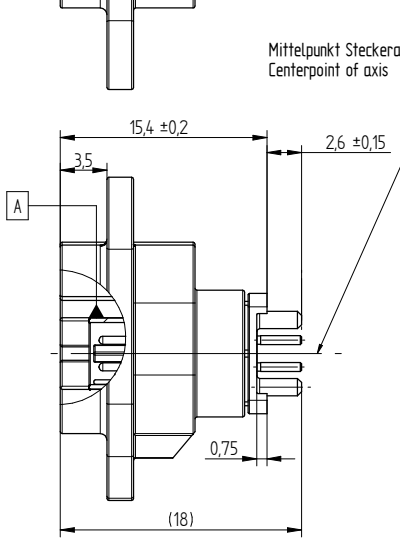

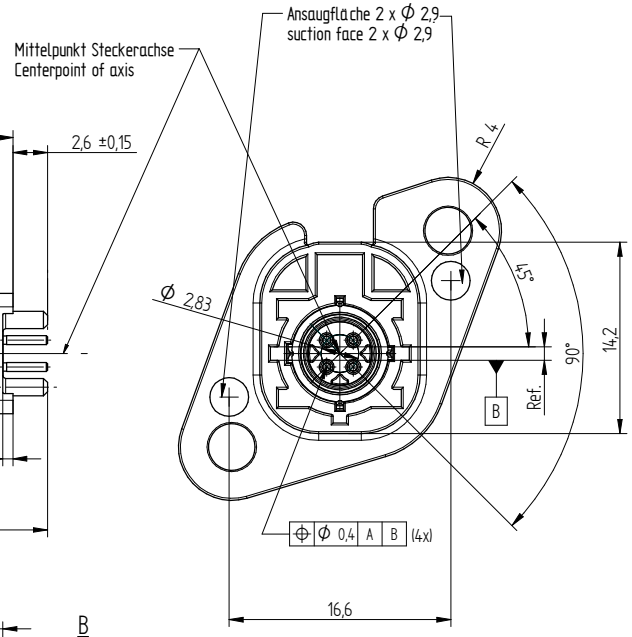

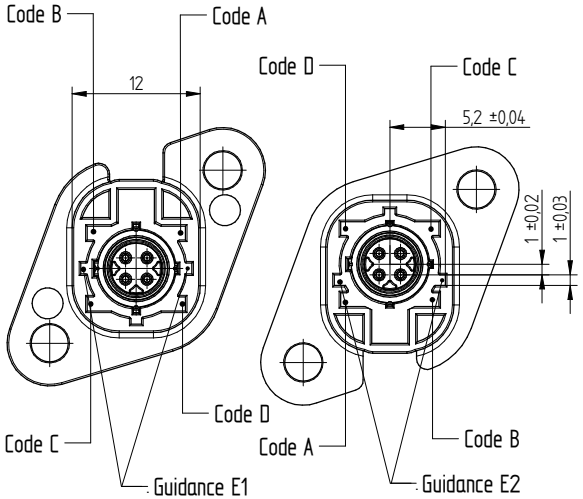

Cable down

Cable up

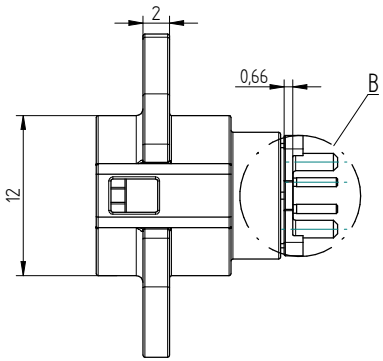

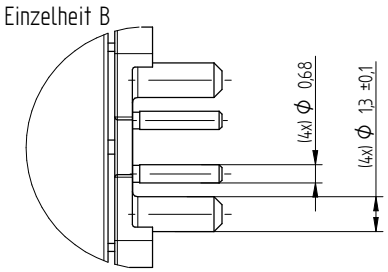

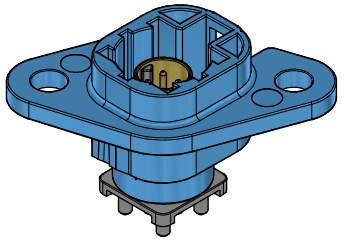

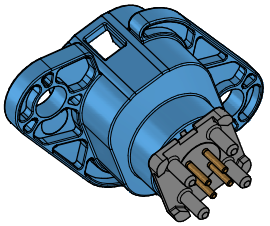

Variable X have to be stated withhin
the drawing number when an order is placed.

Variable X= Coding

Kodierung Coding	Plug	Farbe Color	aehnl. RAL similar to RAL
A = A-B-E1		tiefschwarz jet black	9005
B = A-C-E1		cremeweis cream	9001
C = B-D-E1		signalblau signal blue	5005
D = C-D-E1		bordeauxviolett claret violet	4004
E = B-C-E1		laubgruen leaf green	6002
F = A-D-E1		nussbraun nut-brown	8011
Z		wasserblau water-blue	5021

Kodierung Coding	Plug	Farbe Color	aehnl. RAL similar to RAL
G = A-B-E2		blaugrau bluish gray	7031
H = A-C-E2		erikaviolett heather violet	4003
J = B-D-E2		beige beige	1001
K = C-D-E2		currygelb curry	1027
L = B-C-E2		gelbgruen yellow green	6018
M = A-D-E2		pastellorange pastel orange	2003
O		lichtgruen light green	6027

Variable Z have to be stated withhin
the drawing number when an order is placed

Variable Z = Plating

Variable Z=Plating						
		Variable Z				
Part	Material	1	3	5	7	9
Housing	diecast		Ni+Sn			Ni+Sn
Plastic Housing	PPA					
Centre Pin	brass		Au			Au
Outer Contact	brass		Au			Ni
Insulator	LCP					

Scale: 1:1

IMS CONNECTOR SYSTEMS	general tolerance ISO 2768 mH			scale: 5:1	
			date	name	
			generate 27.07.12	frank	HSD PCB Stecker Typ HSD PCB Plug Type
			change 27.03.14	RBq	
design	a	Reworked	21.03.14	frank	5007.HSD.1X10.00Z
m	ex	alteration	date	name	Rev. a