Status Development

Revision history				
Change ID	Rev	Alteration	Date	Name
Design	A02	Revised	13.07.23	rschwaer

Empfohlenes Leiterplattenlayout – (nur zur Information)
Recommended PCB Footprint – (only for information)

1) Padbreite 0,2mm min./
Pad width 0,2mm min.
2) Lötpastendicke 0,1mm min./
Thicknes of soldering paste 0,1mm min.
3) Alle Durchgangsbohrungen mit
Paste auf der Rückseite/
All through holes inclusive pads
on backside

4) Alle Durchgangsbohrungen/ All through holes — ⌖ Φ 0.05 Ⓜ A

5) Lötfläche und Auflagefläche/ Solder area and keep out area — ⌒ 0.2 A B–B

Lötfläche / solder area

Auflage frei von Lot /
Keep out area, free of solder

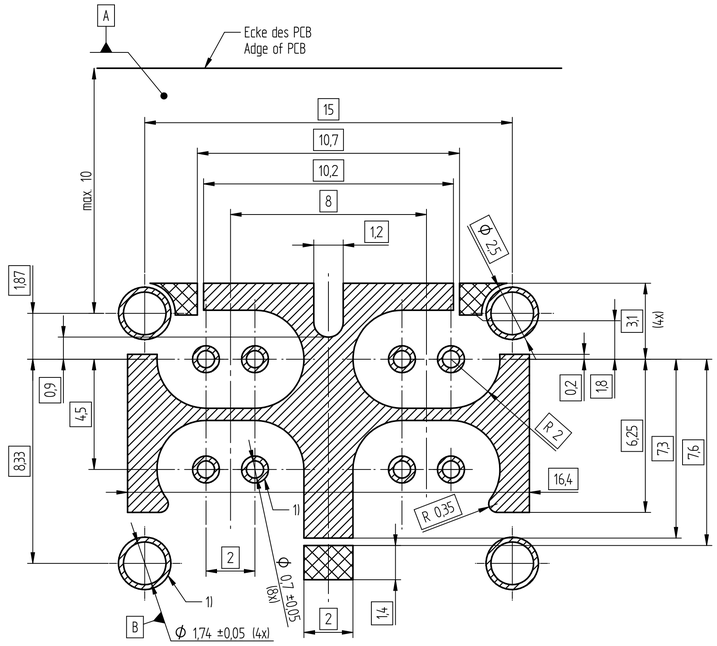

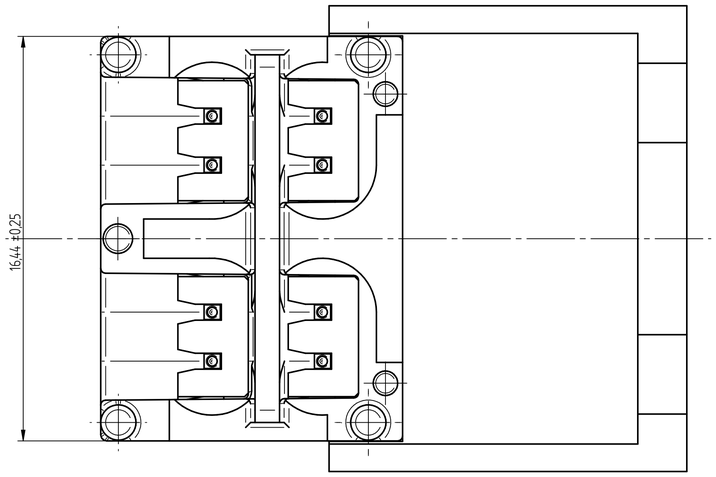

Confidential
Preliminary

vorläufig / Preliminary

Zeichnung unterliegt nicht dem Änderungsdienst
Drawing is not subject to the amendment service

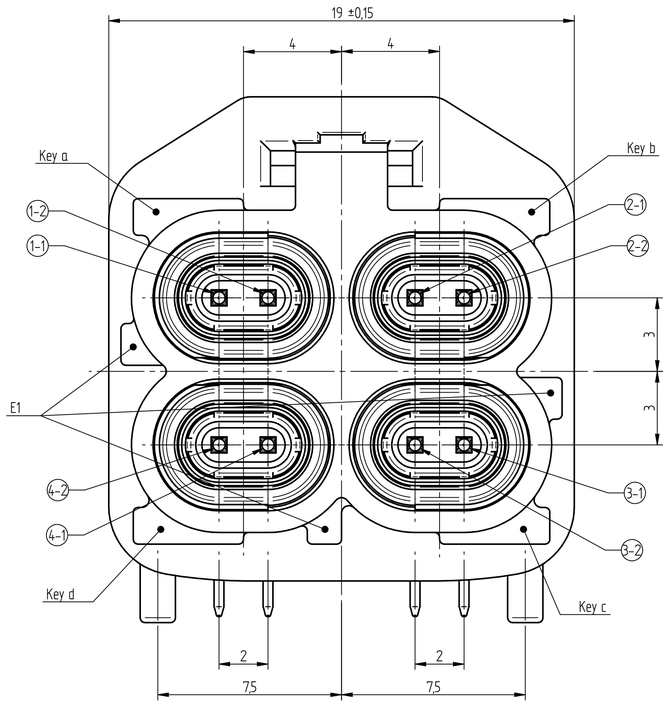

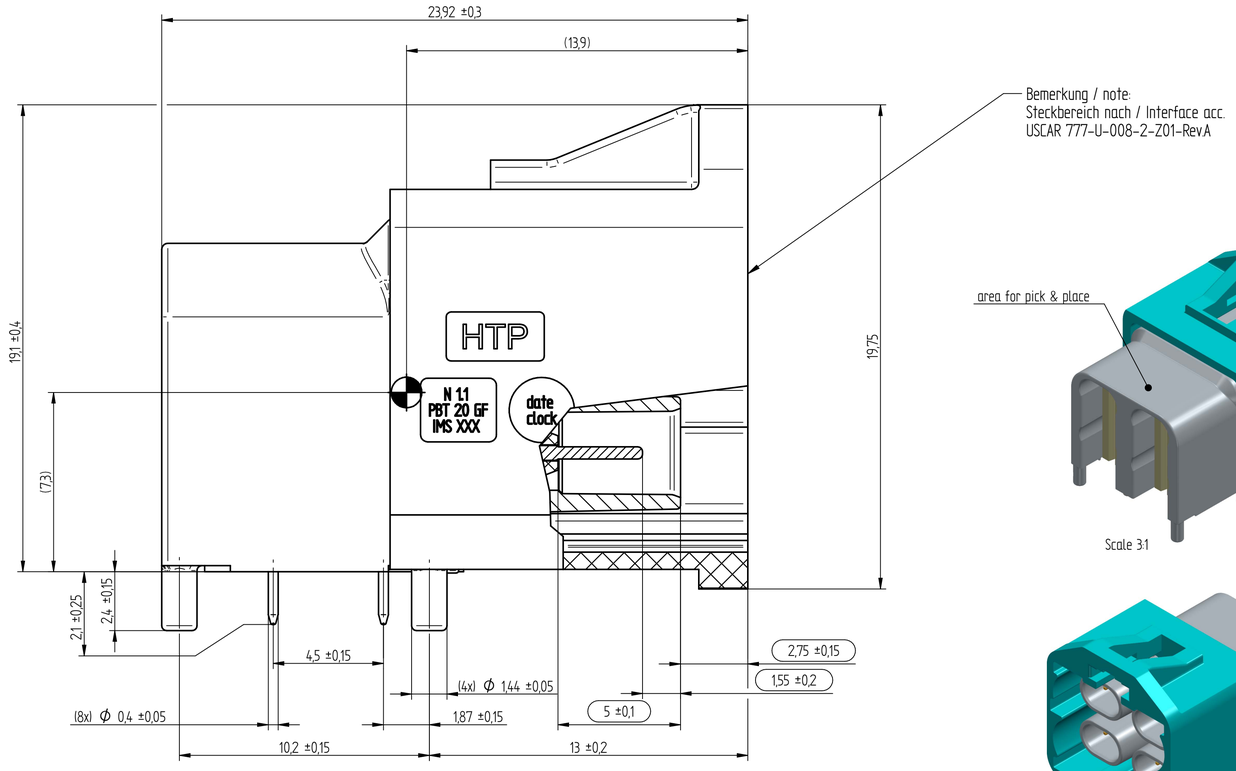

Bemerkung / note:
Steckbereich nach / Interface acc.
USCAR 777–U–008–2–Z01–Rev.A

area for pick & place

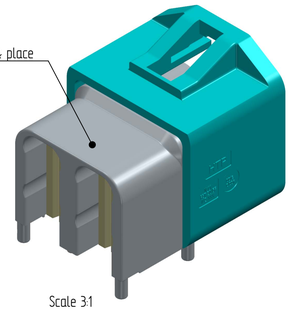

Scale 3:1

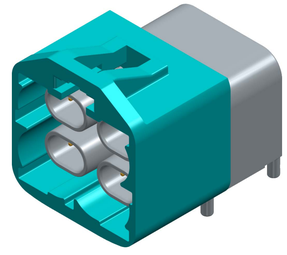

Scale 3:1

Coding guidance						
A	B	C	D	E	F	Z
a+b+E1	a+c+E1	b+d+E1	c+d+E1	b+c+E1	a+d+E1	a+b+c+d+E1
JET BLACK	PURE WHITE	LIGHT BLUE	CLARET VIOLET	MAY GREEN	NUT BROWN	LIGHT GREEN
RAL–9005	RAL–9010	RAL–5012	RAL–4004	RAL–6017	RAL–8011	RAL 6027

	Part	Material	Plating
1	Housing	Diecast	min. 2 µm Sn over Ni
2	Insulators	LCP / tbd.	–
3	Signal contact	Brass	min. 0,12 µm Au over Ni interface
4	Plastic housing	PA GF30	–

Scale 1:1

Projection – ISO 5456	Unit system – Metric	General tolerance	Note	Document type	
	All dim. in [mm]	ISO 2768 mH		Acceptance drawing	
Created by	Approved by	Title		Drawing number	Scale
phalmosi		p.c.b. mount angle plug 12:00 pos		5740.HTP.1X20.00Z	8:1
IMS CONNECTOR SYSTEMS		Supplementary title	Rev.	Date of issue	Lang / Sheet
		Anbauwinkelstecker 12:00 pos	A 02	13.12.2021	EN / 1/1

(C) 16016
All copyrights reserved. This drawing can neither be copied nor made available to third parties or competitor companies without our written permission.