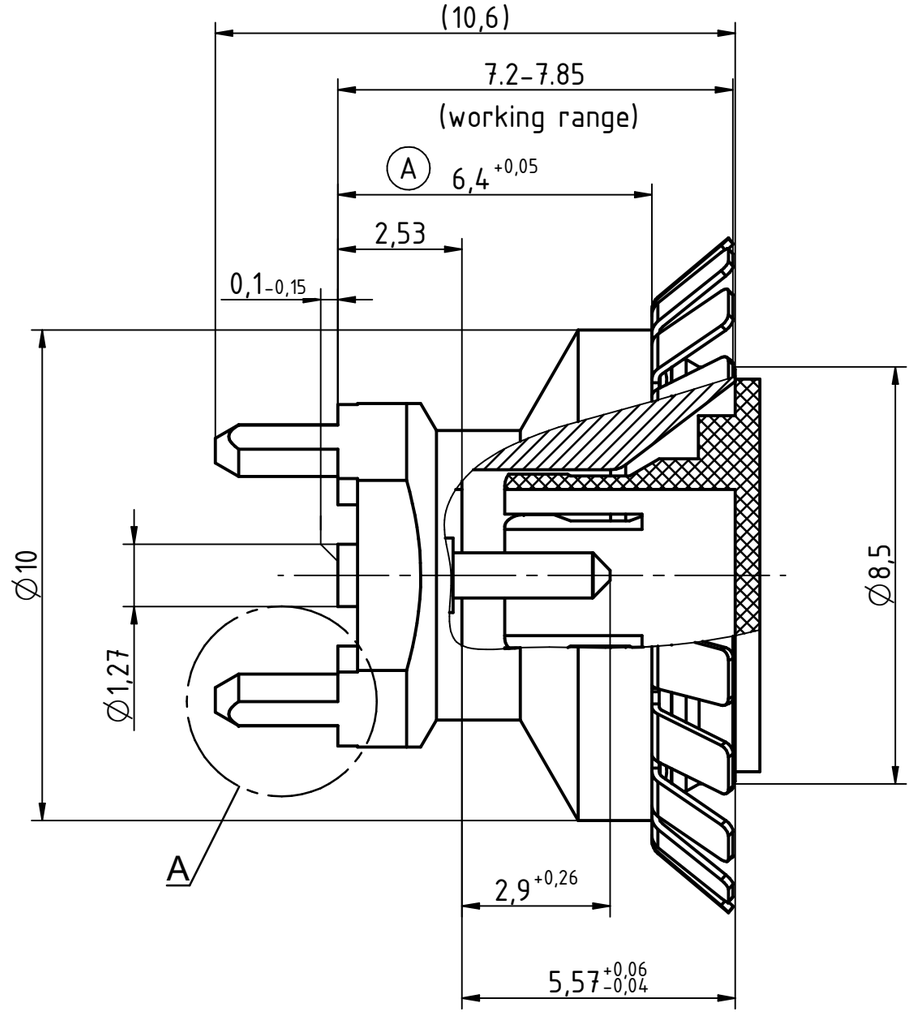

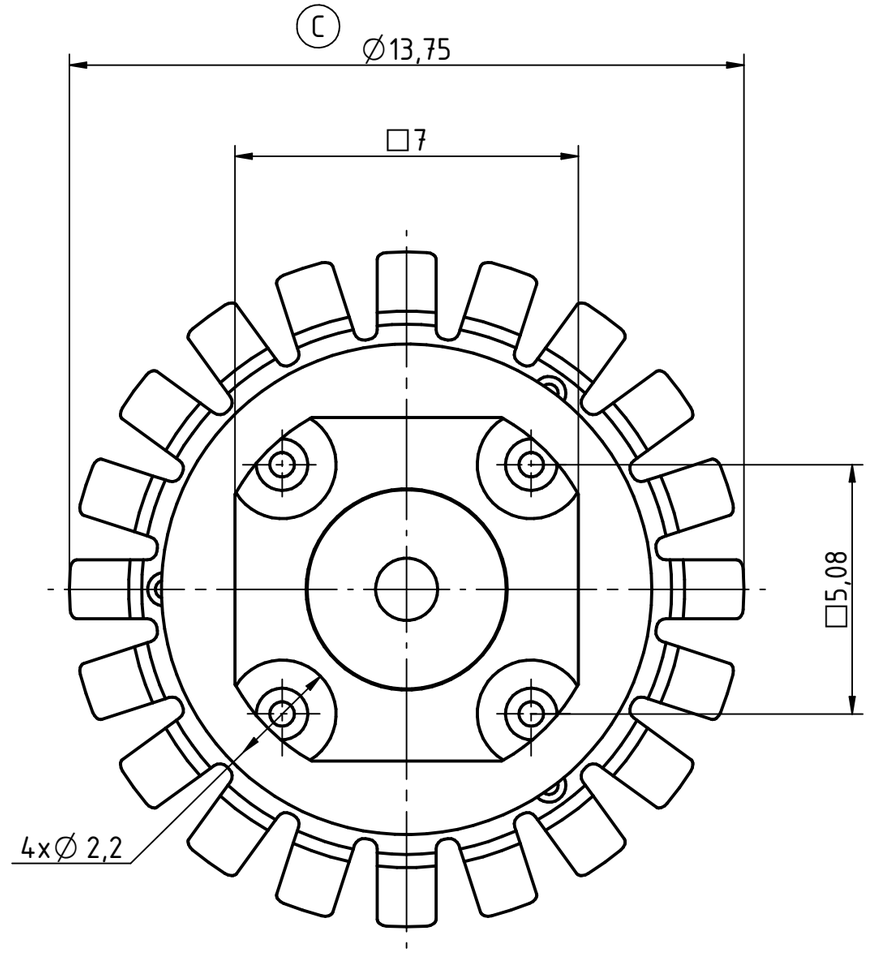

dates of packing:

Tape & Reel: AGK-6078
Parts/reel: 300pcs
Parts/m: 50pcs
Forward run: 0.2m
After run: 0.2m
Length: app. 6.4m
Reel Ø:330mm

scale
1:1

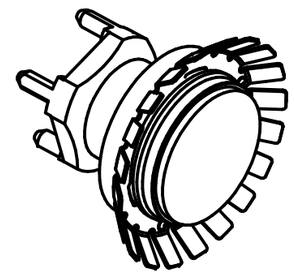

scale
3:1

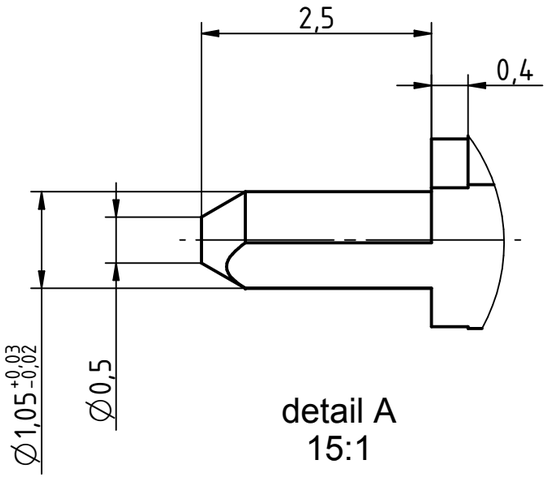

detail A
15:1

recommend PCB layout

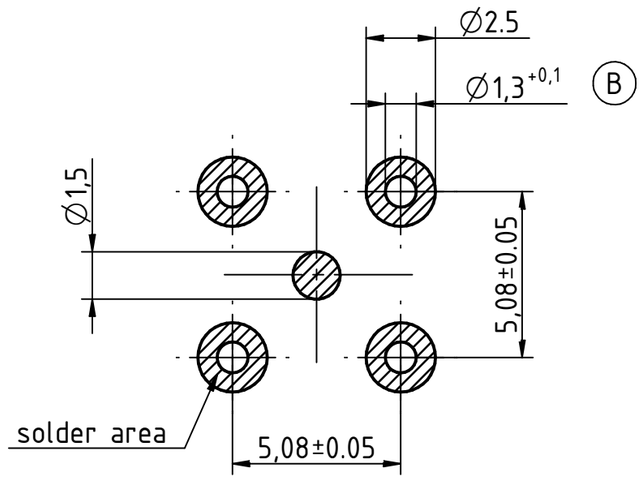

Part	Material	Surface
Housing	Brass	Ni-P + Au
Center contact	Brass	Ni-P + Au
Insulator	PTFE	
Lock washer	CuBe	Ag
Cap	PA 6T	

IMS CONNECTOR SYSTEMS

General Tolerance
ISO2768
mH
angle: ±5°

ISO 2768
-m-
0.5-3 ±0.1
3.0-6 ±0.1
6-30 ±0.2

scale: 12:1
unit: mm

"smooth bore"

	date	name
generate	5/4/2015	Dony Ni
checked		Johnny.Xing
norm		Robin

PSMP p.c.b. mount plug

7314.PSMP.1510.00'

Rev. C

nr.	rev.	alteration	date	name
EC_118_16_CN	C	mod. dim.	08.22.16	Dony
	B	mod. pcb layout	01.26.15	Dony
	A	add. dim.	08.25.14	Dony